2332896-02.2022

HST3 DN HST3-R DN M12	$t_{fix, min}$	$t_{fix, max}$	$h_{nom, min}$	$h_{nom, max}$	h_{min}	h_{nom}
M12x105 30/10 DN	10	30	60	80	$40+h_{nom}$	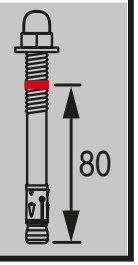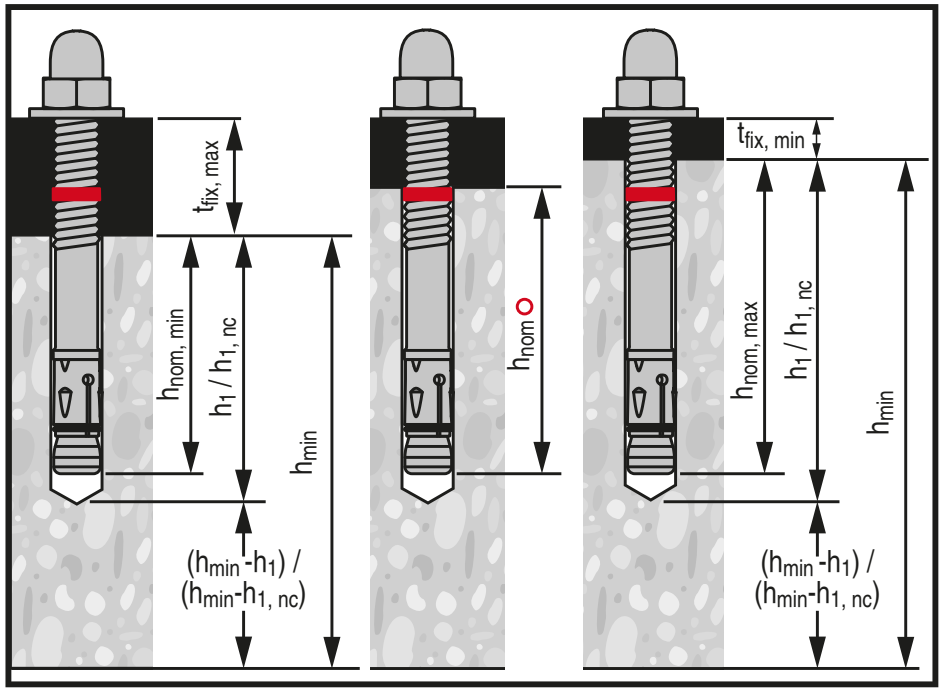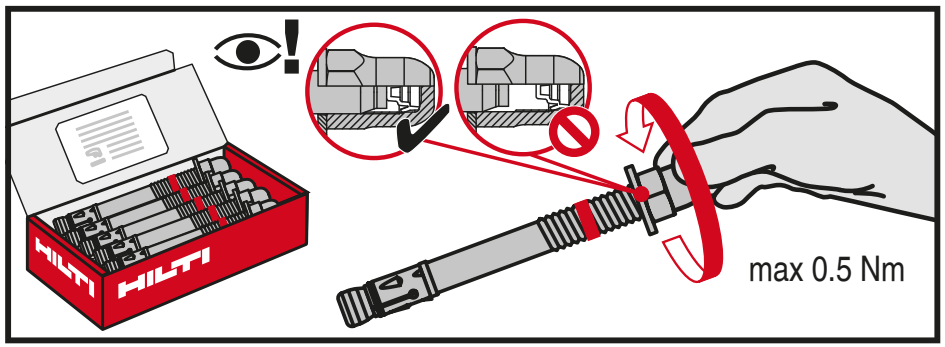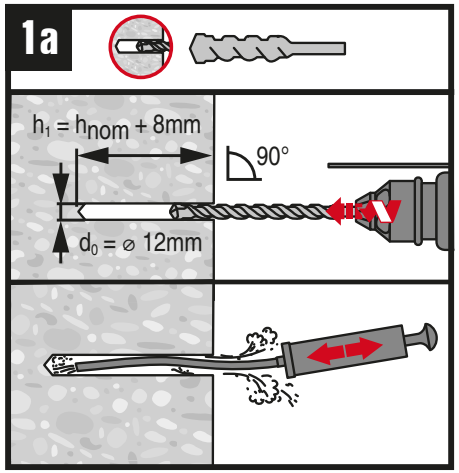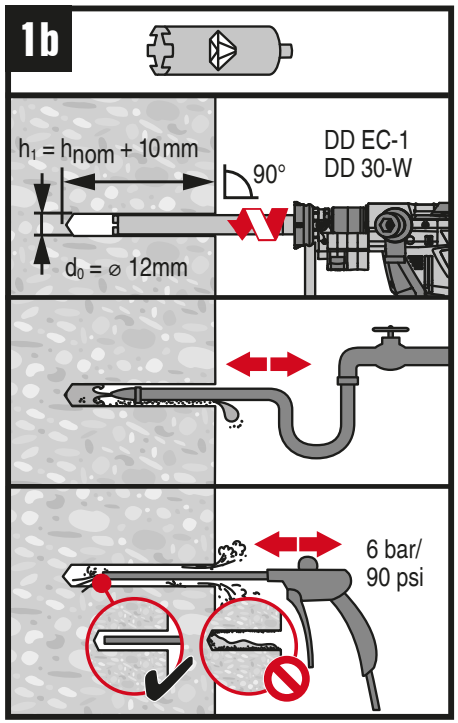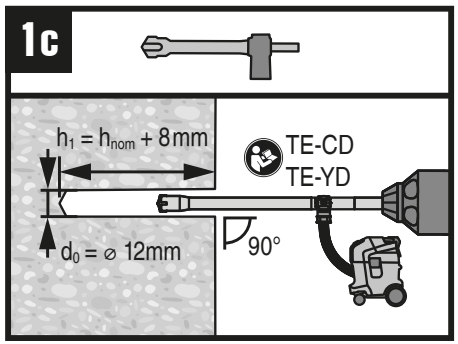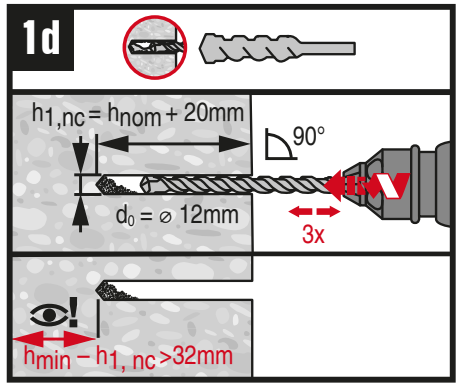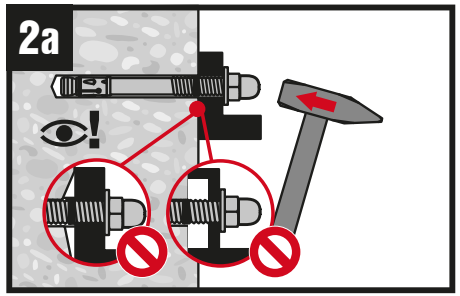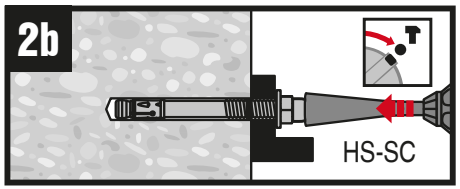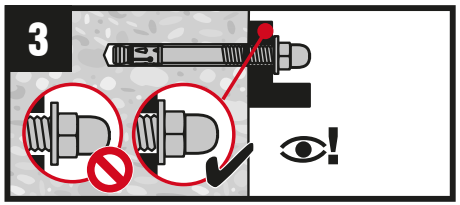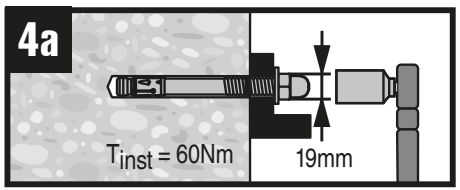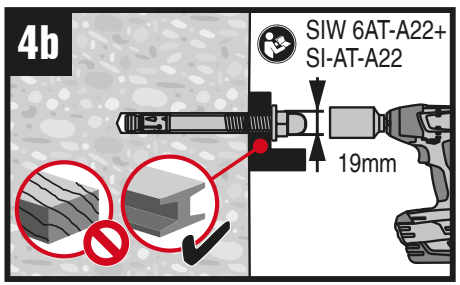
M12x115 40/20 DN	20	40	60	80	$40+h_{nom}$